KAGAMA

TUBE BRACES

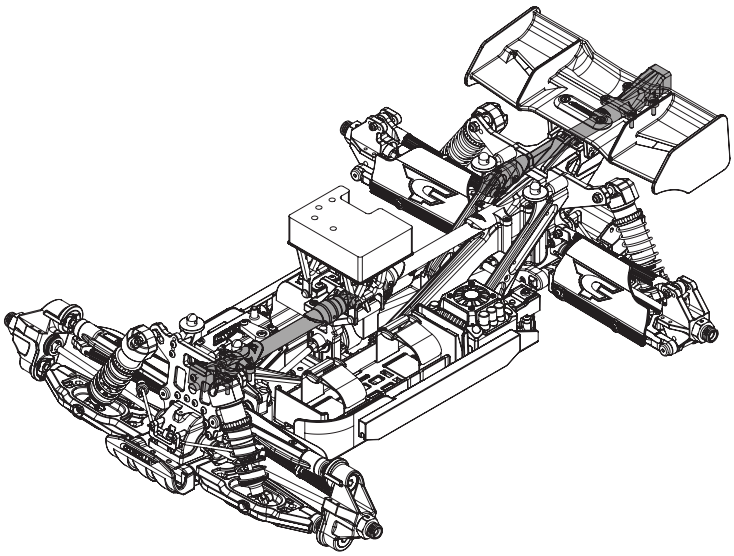

Required Tools:

- 2.0 Hex Driver
- 2.5 Hex Driver

STEP 1

FRONT

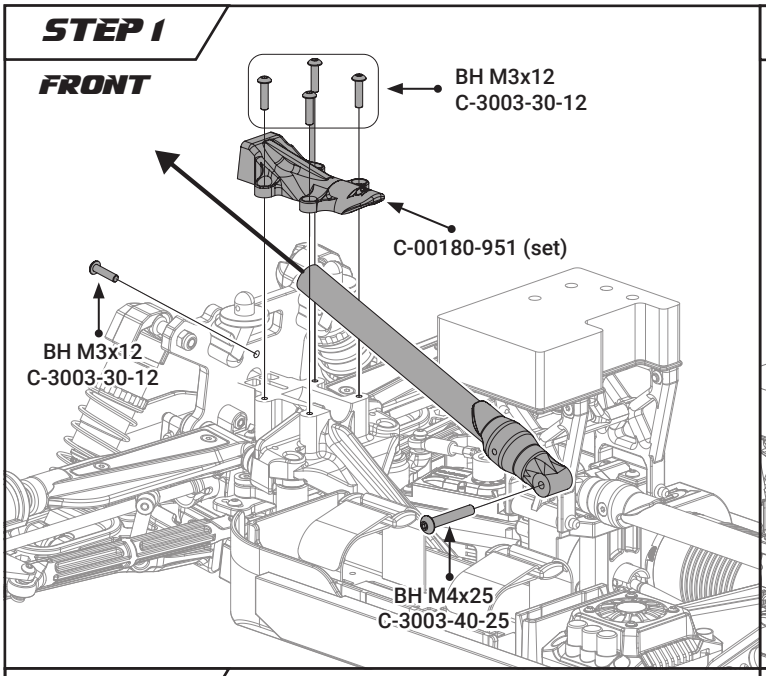

STEP 2

REAR

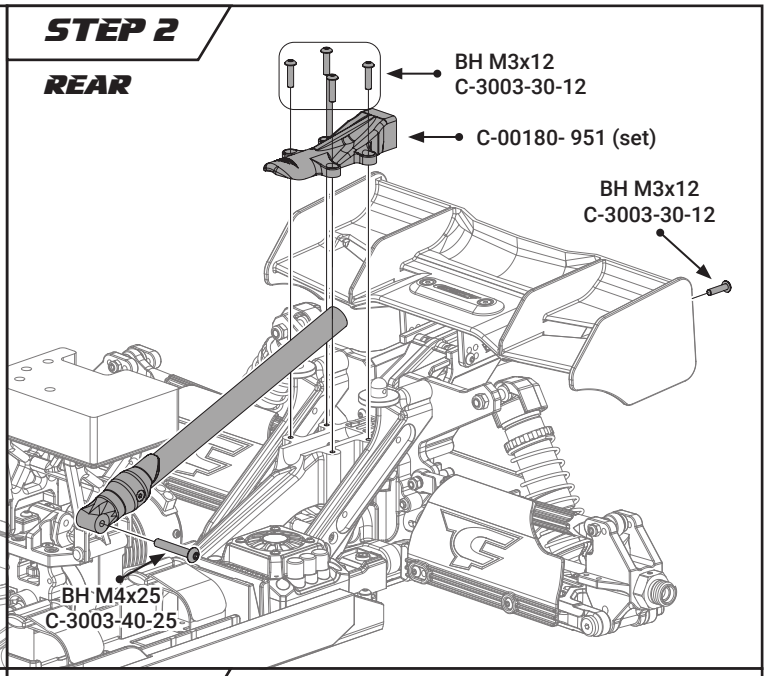

STEP 3

FRONT

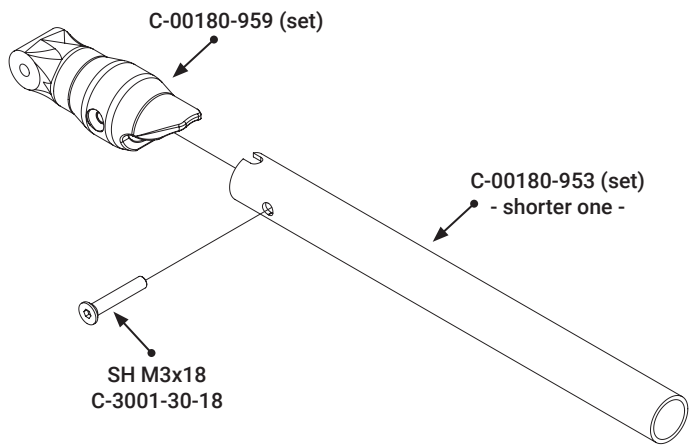

STEP 4
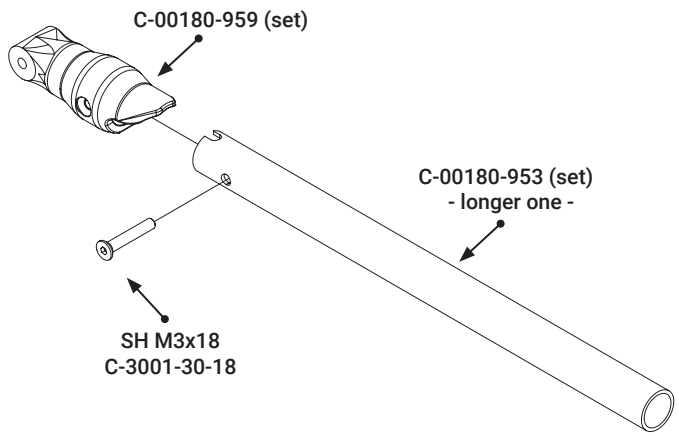
REAR